Superconducting Qubit Design

HardHaq '25 Challenge

From Transmission Lines to Dispersive Readout: A Complete 1-Qubit Chip Architecture

Team Jokair

Design Objectives

The Goal

Engineer a single transmon qubit coupled to a microwave resonator on a silicon substrate, optimized for the dispersive readout regime.

Key Constraints

- **Frequency Range:** 4 - 8 GHz
- **Impedance:** 50 Ω matched feedline
- **Regime:** Dispersive ($g \ll \Delta$)
- **Material:** High-resistivity Silicon

Step 1: The Feedline

Impedance Matching

The foundation of the chip is a Coplanar Waveguide (CPW) transmission line. To minimize reflections and signal loss, we targeted a characteristic impedance (Z_0) of 50 Ω. We kept the gap constant, mainly adjusting trace width

Design Parameters

- **Substrate:** Silicon ($\varepsilon_r = 11.9$)
- **Trace Width (W):** 104.5 μm
- **Gap (G):** 50 μm
- **Result:** S(1,1) < -20 dB across 4-8 GHz

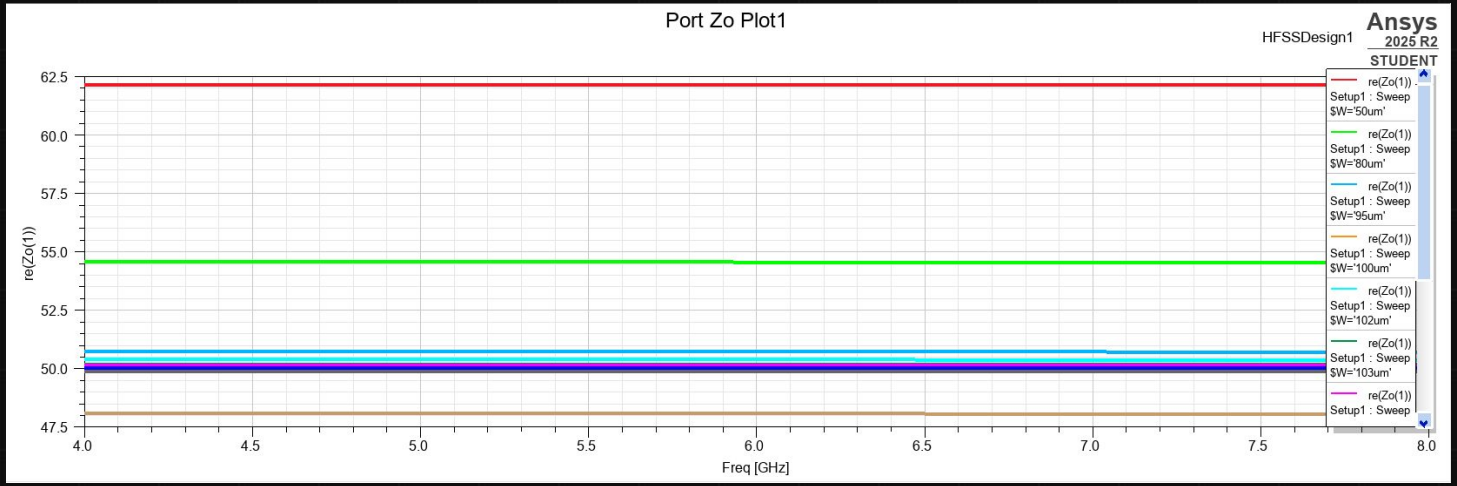

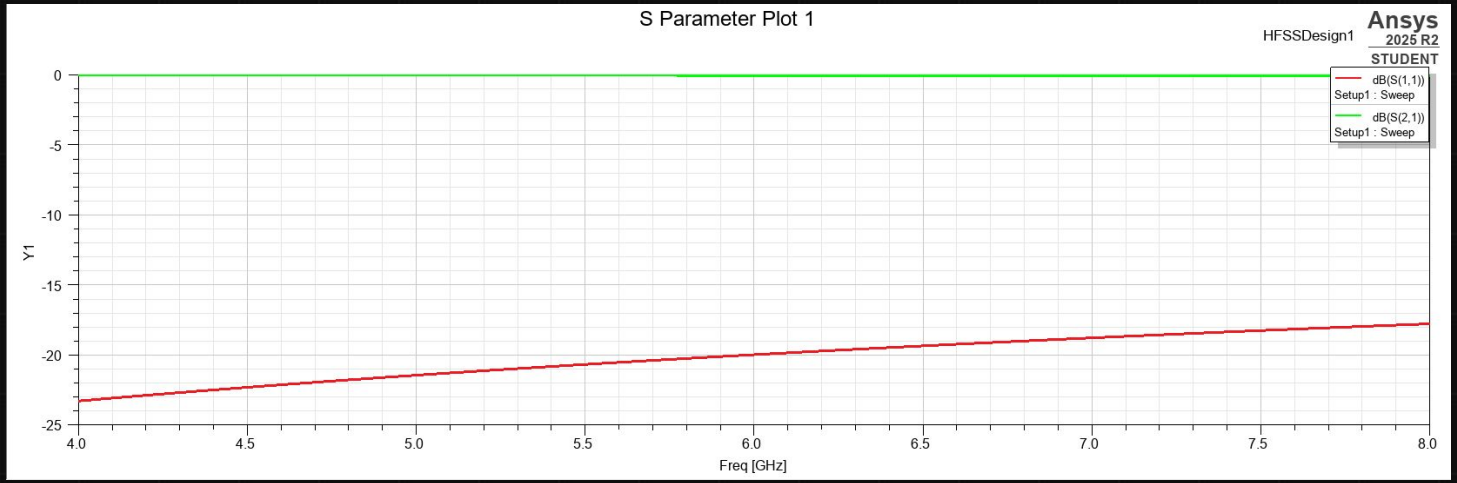

Step 2: The Readout Resonator

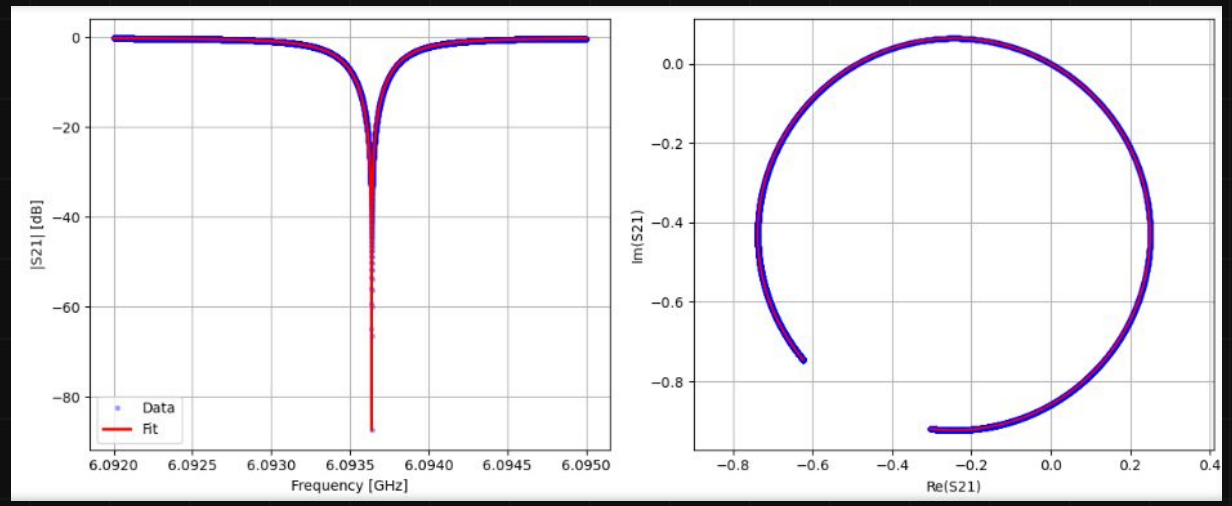

Frequency & Quality Factor

We designed a quarter-wave (λ/4) notch resonator inductively coupled to the feedline.

- **Frequency (f_r):** 6.10 GHz
- **Coupling Q (Q_c):** ~10,700, between 1,000-50,00
- **Internal Q (Q_i):** > 10^6
- **Status:** Overcoupled regime, optimized for fast readout without destroying qubit lifetime. Internal Q was dielectrically limited

Our Process

Adjusted resonator length until we had a frequency drop at around 6 GHz. Ran into issues with the circlefit tool, so we used a different python script to run circlefit

Step 3: The Transmon Qubit

Transmon Regime

To suppress charge noise while maintaining anharmonicity, we targeted an E_j/E_c ratio greater than 50.

Final Specs

- **Frequency (f_q):** 5.20 GHz
- **Total Capacitance (C):** 79.4Ff
- **Anharmonicity (E_c):** 244 MHz
- **Josephson Energy (E_j):** 13.8 GHz
- **Ratio:** $E_j / E_c \approx 56.6$

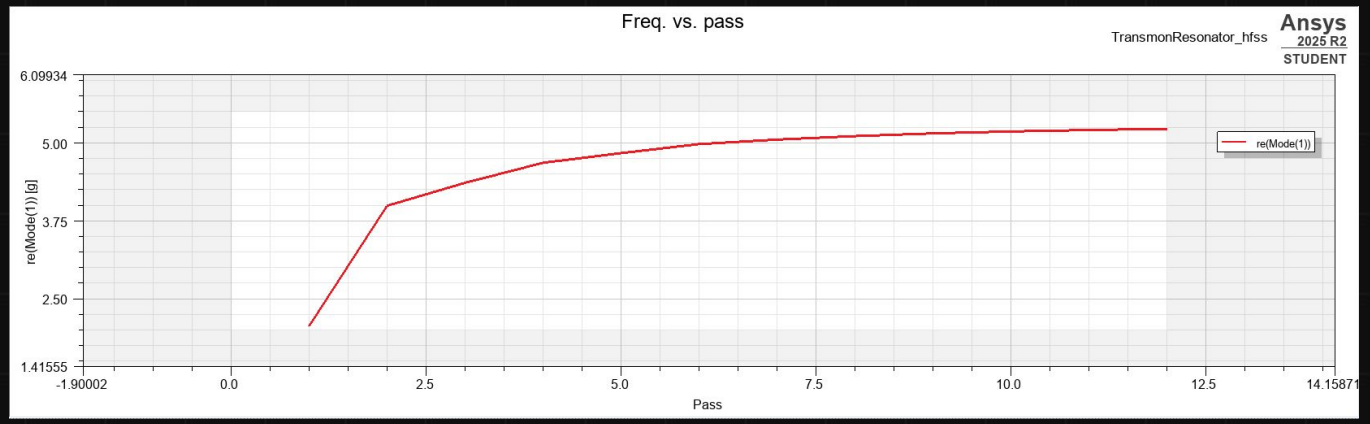

Step 4: Coupling Calculation

The Methodology

We extracted the Maxwell Capacitance Matrix to determine the cross-coupling term (C_{qr}) and derived the coupling strength g.

35.8 MHz

FINAL COUPLING (g)

This places the system deeply in the dispersive regime ($g \ll \Delta$), with a detuning of 900 MHz.

Physics Derivation

FORMULA:

$$g = \frac{1}{2}\frac{C_{qr}}{\sqrt{C_q C_r}}\sqrt{\omega_q \omega_r}$$

SIMULATION VALUES:

- C_{qr} = 2.30 fF (Maxwell Matrix)
- C_q = 79.98 fF (Qubit Total)
- C_r ≈ 410 fF (Resonator Total)

CALCULATION:

```
Ratio = 2.30 / √(79.98 × 410) ≈ 0.0127
Freq Mean = √(5.2 × 6.1) = 5.63 GHz
```

g ≈ 0.5 × 0.0127 × 5.63 GHz = 35.8 MHz

Final Architecture

The integrated design combines the 50 Ω feedline, the 6.1 GHz resonator, and the 5.2 GHz transmon into a single unified chip layout.

Ready for Fabrication

All geometric constraints and physics parameters have been verified via Finite Element Analysis (HFSS) and Capacitance Matrix extraction.

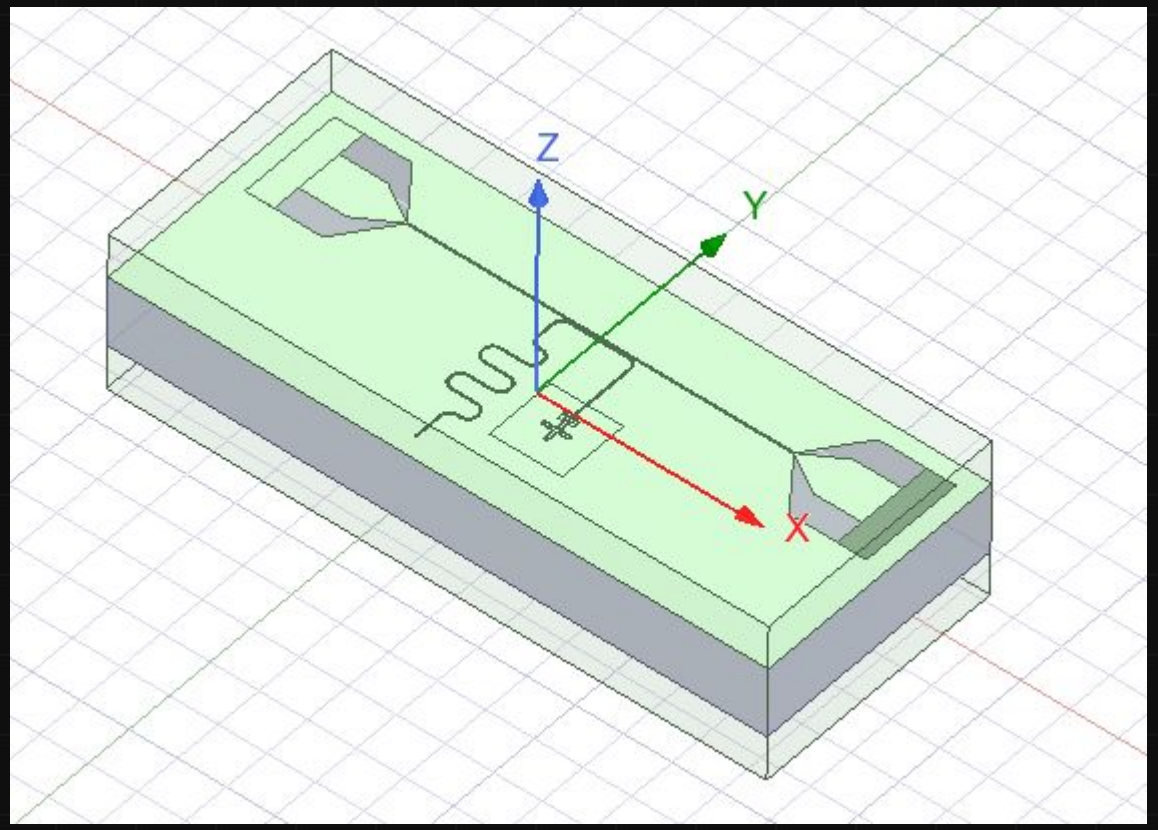

Final Design Specifications

Component	Parameter	Value
Feedline	Trace Width	10.45 μm
	Gap Width	5.00 μm
Resonator	Resonator Length	200 μm
Qubit	Cross Length	264.24 μm
	Arm Width	24.00 μm
	Gap to Ground	12.00 μm
Coupler	Claw Length	116.00 μm
	Claw Gap	6.00 μm

Going Further: Substrate Analysis

Feature	Sapphire (Al_2O_3)	High-Purity Silicon (Si)
Coherence	**Historically Higher.** Low loss tangent; clean crystal structure. Ideal for record T1 times.	**Rapidly Improving.** Traditionally limited by oxide loss, but aggressive cleaning now yields >0.3ms coherence.
Scalability	**Low.** Very hard to etch deep vias (TSVs) for 3D integration.	**High.** Industry standard (DRIE). Easy to create complex 3D architectures.
Verdict	Best for small, ultra-coherent chips.	Best for large-scale processors.

Going Further: Flip-Chip Architecture

- The substrate limits coherence through **energy relaxation (T1)**, which occurs when the qubit loses energy to defects in the material. This happens via three main channels:
- **Surface Dielectric Loss (Dominant)**
- **Bulk Dielectric Loss:**
- **Piezoelectric Coupling**
- Sapphire wins out in terms of achieving high levels of coherence but fails in terms of scalability when compared to silicon.

The "Best of Both Worlds"

To solve the substrate dilemma, we propose a **Dual-Substrate Flip-Chip** design.

Top Chip (Sapphire): Hosts the Qubit for maximum coherence.

Bottom Chip (Silicon): Hosts Readout/Wiring for complex routing.

Bonding: Superconducting Indium Bumps ("Cold Weld").